Ann. N.Y. Acad. Sci. ISSN 0077-8923

ANNALS OF THE NEW YORK ACADEMY OF SCIENCES
Issue: *The Neurosciences and Music IV: Learning and Memory*

Neurodynamics, tonality, and the auditory brainstem response

Edward W. Large and Felix V. Almonte

Center for Complex Systems and Brain Sciences, Florida Atlantic University, Boca Raton, Florida

Address for correspondence: Edward Large, Florida Atlantic University, Center for Complex Systems and Brain Sciences, 777 Glades Rd. BS-12, Boca Raton, FL 33431. large@ccs.fau.edu

Tonal relationships are foundational in music, providing the basis upon which musical structures, such as melodies, are constructed and perceived. A recent dynamic theory of musical tonality predicts that networks of auditory neurons resonate nonlinearly to musical stimuli. Nonlinear resonance leads to stability and attraction relationships among neural frequencies, and these neural dynamics give rise to the perception of relationships among tones that we collectively refer to as tonal cognition. Because this model describes the dynamics of neural populations, it makes specific predictions about human auditory neurophysiology. Here, we show how predictions about the auditory brainstem response (ABR) are derived from the model. To illustrate, we derive a prediction about population responses to musical intervals that has been observed in the human brainstem. Our modeled ABR shows qualitative agreement with important features of the human ABR. This provides a source of evidence that fundamental principles of auditory neurodynamics might underlie the perception of tonal relationships, and forces reevaluation of the role of learning and enculturation in tonal cognition.

Keywords: tonality; auditory brainstem; dynamics; oscillation; mode-locking

Stability and attraction are central to the theory of tonal music. In tonal melodies, less stable tones are perceived as points of tension or dissonance, and more stable tones are perceived as points of relaxation or consonance.[1–3] These relationships can be summarized as a hierarchy of relative stability, in which less stable tones are heard in relation to more stable ones.[3] More stable tones are said to attract the less stable tones; alternatively less stable tones are said to point toward more stable ones. Tonal percepts are essential because the internal pointing of one tone toward other tones is thought to function analogously to the meaning of words in language, imbuing nonreferential sound patterns with musical meaning.[4] Tonal relationships are universal in the sense that the melodies of virtually all musical systems are believed to elicit tonal percepts. Like the meanings of words in different languages, however, tonal relationships in different musical systems are thought to be learned through enculturation.

What types of processes in the nervous system might lead to tonal cognition? Early theories of tonality suggested that relationships among tone frequencies governed perceived tonal relationships.[5] More modern theories of auditory function held that the auditory system performs a rough Fourier analysis of sound.[6,7] They argued against frequency ratio theories because from the linear frequency analysis point of view, there is nothing special about frequency ratios.[6] However, recent evidence of highly nonlinear processing in the auditory nervous system demands reevaluation of this argument because, in nonlinear systems, frequency ratio relationships are important determinants of system behavior. Nonlinear responses are found in the active processes of the cochlea,[8,9] and in neural populations of the cochlear nucleus, inferior colliculus, and higher auditory areas,[10–13] in which neural activity time-locks to stimulus periodicities up to hundreds of hertz or more. Cochlear outer hair cells and auditory neurons do not decompose

doi: 10.1111/j.1749-6632.2012.06594.x
 © 2012 New York Academy of Sciences.

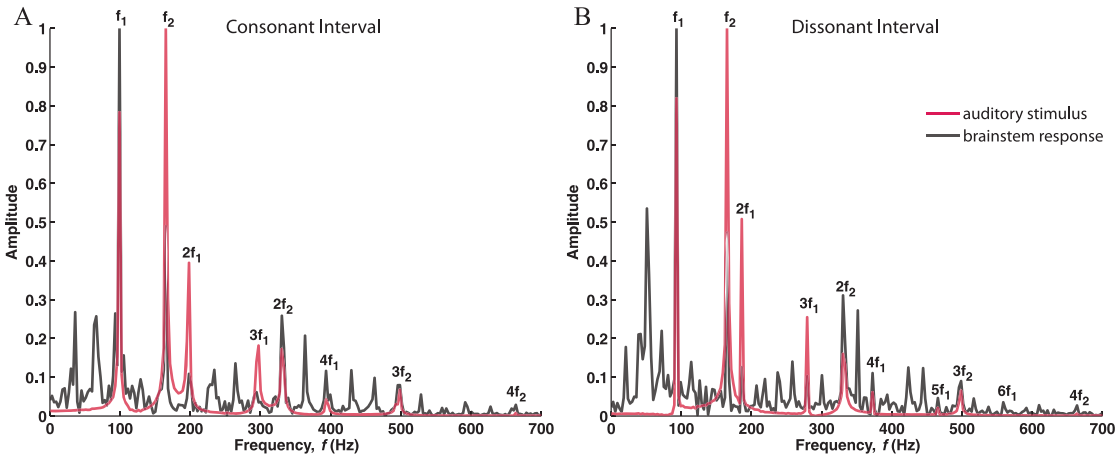

Figure 1. Nonlinear responses to harmonic musical intervals in the human auditory brainstem.[23] For consonant (A) and dissonant (B) intervals the brainstem response includes not only stimulus frequencies, but also nonlinear resonances not present in the auditory stimulus.

signals into orthogonal bands; instead, each responds to multiple related frequencies in a manner that is fundamentally different from linear techniques, such as Fourier analysis.

Two recent approaches to musical tonality appeal to the theory of nonlinear dynamical systems to explain the perception of consonance and dissonance in musical intervals[14] and stability and attraction in musical melodies.[15,16] Our approach predicts that, as auditory neurons resonate to musical stimuli, dynamical stability and attraction relationships arise among neural frequencies. This model of neural population dynamics makes accurate perceptual predictions.[15] Moreover, the theory is formulated at an appropriate level to make predictions about auditory population responses. Here, we explore predictions about the processing of sound in the human auditory brainstem.

Background

In the central auditory system, action potentials time-lock to both the fine time structure and the temporal envelope modulations of auditory stimuli at many different levels, including cochlear nucleus, superior olive, inferior colliculus (IC), thalamus, and A1.[17,18] Nonlinear spectrotemporal receptive fields (STRFs) have been identified in the inferior colliculus (IC) of the cat,[10] the gerbil,[12] and in cat primary auditory cortex.[13] Nonlinear responses to intervals composed of pure tones have been identified in the brainstem auditory evoked potentials of guinea pigs.[19] In humans, nonlinear frequency-following responses (FFRs) have been observed in the brainstem using electroencephalography (EEG),[20,21] and in the auditory cortex using steady-state methods in magnetoencephalography (MEG).[22]

In one recent study, highly nonlinear responses to harmonic musical intervals were measured in the human auditory brainstem response (ABR; see

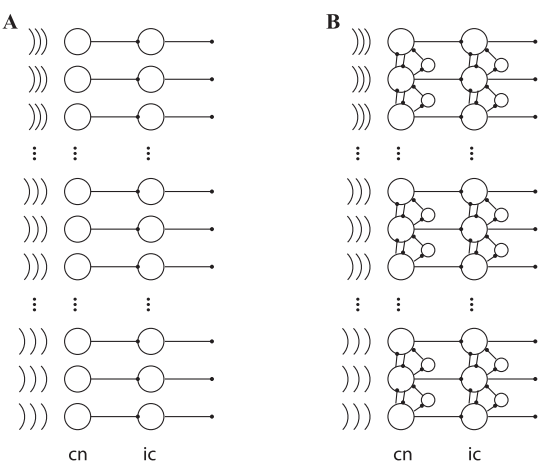

Figure 2. Two models of time-locked activity. (A) Phase-locked spiking in the central auditory system may represent passive transmission of synchronized basilar membrane motion via a labeled line code. (B) Alternatively, time-locked nonlinear neural activity may be carried forward by active oscillatory circuits in the central auditory system. Adapted from Ref. 31.

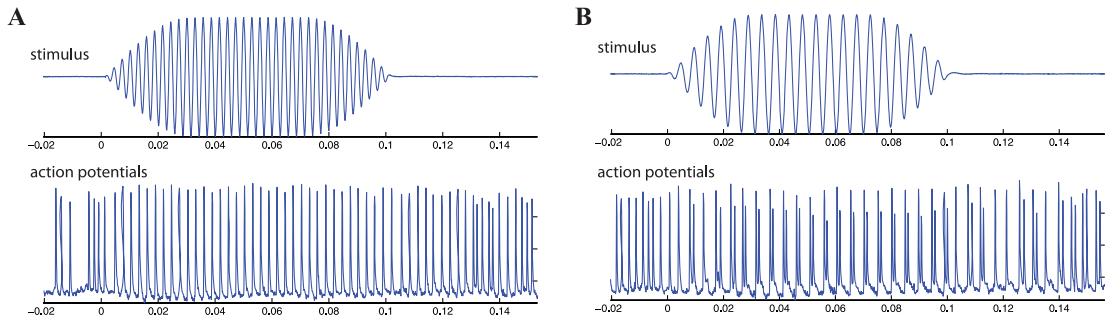

Figure 3. Time-locking of action potentials in the auditory system. (A) Phase-locking and (B) mode-locking (2:1) of an auditory medulla neuron in the fish Pollimyrus to two different stimulus frequencies.[27]

Fig. 1).[23] For two common musical intervals, the brainstem representation was composed of not only stimulus frequencies, but also numerous resonances at frequencies that were not present in the auditory stimulus. Note that these nonlinear responses could not be explained as cochlear distortion products because the fundamental frequency ratios of the intervals were 1.6 (166 Hz/99 Hz) and 1.7 (166 Hz/93 Hz). Cochlear distortion products decrease rapidly for frequency ratios greater than about 1.3, making it highly unlikely that the observed resonances arose in the cochlea.[24,25] Thus, for these stimuli, the observed nonlinearities must have originated mainly in the neural processes of the central auditory system.

Findings of nonlinear processing in the auditory system challenge the assumptions of traditional auditory models. However, significant theoretical advances in the study of neural signal processing will be necessary to understand this form of biological signal processing and pattern analysis. Our approach is to reconsider the fundamental assumption that phase-locked spiking in the central auditory system represents passive transmission of synchronized basilar membrane motion.[26] Figure 2A illustrates this standard assumption, while Figure 2B illustrates the alternative hypothesis that time-locked neural activity is carried forward by active oscillatory circuits in the central auditory system, leading to nonlinear STRFs and ABRs.

If time-locked activity depends on active oscillatory circuits, one might observe not only phase-locking, but also mode-locking in central auditory neurons. *Mode-locking* is a generalization of phase-locking in which the interaction between the dynamics of a nonlinear oscillator and a periodic stimulus causes m cycles of the oscillator to lock to k cycles of the stimulus. Figure 3A and B illustrate phase-locking and mode-locking, respectively, of an auditory medulla neuron in the fish *Pollimyrus* to different stimulus frequencies.[27] In panel A the neuron produces one spike per cycle, and in panel B the neuron produces two spikes per cycle, at specific phases of stimulation. Mode-locked spiking patterns have also been observed *in vitro* under dendritic cell (DC) injection,[28–30] and mode-locking to temporal envelope modulations of acoustic signals has been reported in guinea pig cochlear nucleus chopper and onset neurons.[31]

Theory and model

Mode-locked dynamics can be observed in generic neuron models[32,33] and in models of oscillatory neural populations.[34,35] To investigate the implications of mode-locking for neural population responses, we consider a generic network of n nonlinear oscillators, arranged tonotopically according to the natural frequency ($f_i = 1/\tau_i$):

$$\tau_i \dot{z}_i = z_i \left(\alpha + i2\pi + (\beta_1 + i\delta_1)|z_i|^2 + \frac{(\beta_2 + i\delta_2)\varepsilon|z_i|^4}{1 - \varepsilon|z_i|^2} \right) + RT. \quad (1)$$

The notation $\dot{z}$ denotes the derivative of z with respect to time, dz/dt. Here, α is a bifurcation parameter, β_1 and β_2 are amplitude compression parameters, and ε controls the amount of nonlinearity in the system. For simplicity, it is assumed that δ_1, $\delta_2 = 0$, and $\beta_2 = -1$.

In this generic model, each k:m locked mode is captured by a specific term, called a monomial, in a series of resonant terms (RT). For example, we

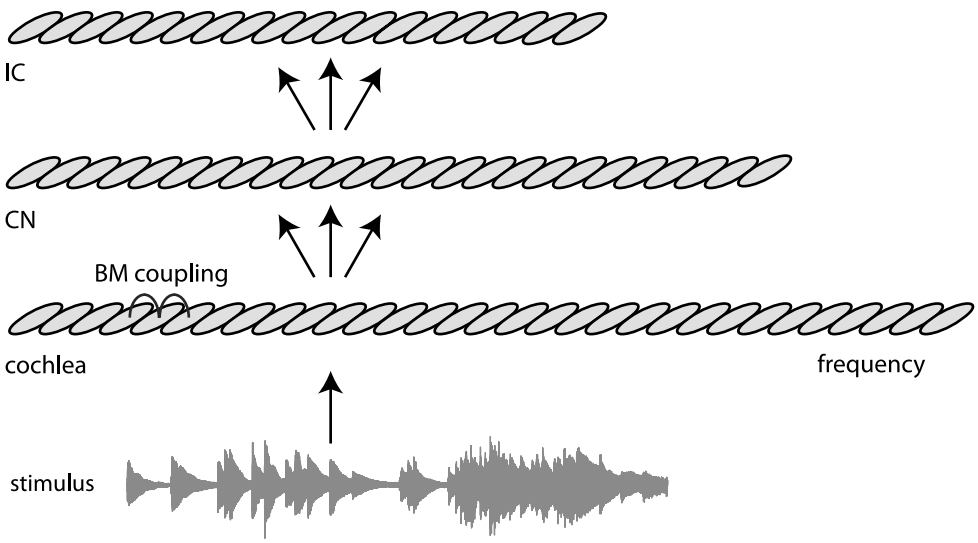

Figure 4. Network architecture. Three-layered auditory processing network architecture representing the cochlea, cochlear nucleus (CN), and the inferior colliculus (IC). The cochlear layer simulates nonlinear cochlear filtering of the instantaneous pressure waveform (in Pascals). The CN and IC networks simulate mode-locked responses to cochlear signals.

can capture mode-locking to a sinusoidal stimulus of unknown frequency, $x(t)$, using the following definition:[35]

$$\begin{aligned} RT = {} & x + \sqrt{\varepsilon} x \bar{z} + \varepsilon x \bar{z}^2 + \varepsilon \sqrt{\varepsilon} x \bar{z}^3 + \ldots \\ & + \sqrt{\varepsilon} x^2 + \varepsilon x^2 \bar{z} + \varepsilon \sqrt{\varepsilon} x^2 \bar{z}^2 + \varepsilon^2 x^2 \bar{z}^3 + \ldots \\ & + \varepsilon x^3 + \varepsilon \sqrt{\varepsilon} x^3 \bar{z} + \varepsilon^2 x^3 \bar{z}^2 + \varepsilon^2 \sqrt{\varepsilon} x^3 \bar{z}^3 + \ldots \\ & + \varepsilon \sqrt{\varepsilon} x^4 + \varepsilon^2 x^4 \bar{z} + \varepsilon^2 \sqrt{\varepsilon} x^4 \bar{z}^2 + \varepsilon^3 x^4 \bar{z}^3 + \ldots \\ = {} & (x + \sqrt{\varepsilon} x^2 + \varepsilon x^3 + \varepsilon \sqrt{\varepsilon} x^4 + \ldots) \\ & \cdot (1 + \sqrt{\varepsilon} \bar{z} + \varepsilon \bar{z}^2 + \varepsilon \sqrt{\epsilon} \bar{z}^3 + \ldots). \end{aligned} \tag{2}$$

In general, mode-locked responses depend on the frequency of the stimulus and the intrinsic frequency of the oscillator. When the relationship between stimulus frequency, f, and oscillator frequency, f_0, is $kf \simeq mf_o$ the monomial governs $k{:}m$ mode-locking behavior. Moreover, when the stimulus contains more than one frequency component, resonant terms also include summation frequencies (e.g., f_1+f_2) and difference frequencies (e.g., f_2–f_1), in addition to harmonics ($k * f_1$), subharmonics (f_1/m), and integer ratios (e.g., $k * f_1/m$), where f_1 and f_2 are stimulus frequencies, and k and m are integers.[36] The greater the relative amplitudes, the stronger the mode-locking. Mode-locked responses are stable over regions of parameter space called *Arnold tongues.*[37] Mode-locking regions have implications for the perception of tonal stability and attraction.[15]

Predicting the auditory brainstem response

To understand the implications for brainstem neurophysiology, we constructed a network as shown in Figure 4, in which one network simulated nonlinear cochlear filtering, and the second and third networks simulate mode-locked responses in the cochlear nucleus (CN) and inferior colliculus (IC), respectively. Outer hair cell dynamics were modeled using critical Hopf oscillators, capturing the amplification, compression, and frequency selectivity of cochlear processing.[38] Basilar membrane coupling[39,40] was captured as local diffusive coupling. The dynamics of CN and IC networks were modeled using active mode-locking oscillators, which received afferent input from all frequency channels. Simple multifrequency coupling was chosen to enable mode-locking to combination frequencies in the IC network, without assuming any more specific connectivity arrangement, and oscillators within the CN and IC networks were not coupled internally. Parameters for the cochlear model were $\alpha = 0$, $\beta_1 = -100$; for the CN network, $\alpha = 0.1$, $\beta_1 = -10$; and for the IC network, $\alpha = 0.01$, $\beta_1 = -1$. Characteristic

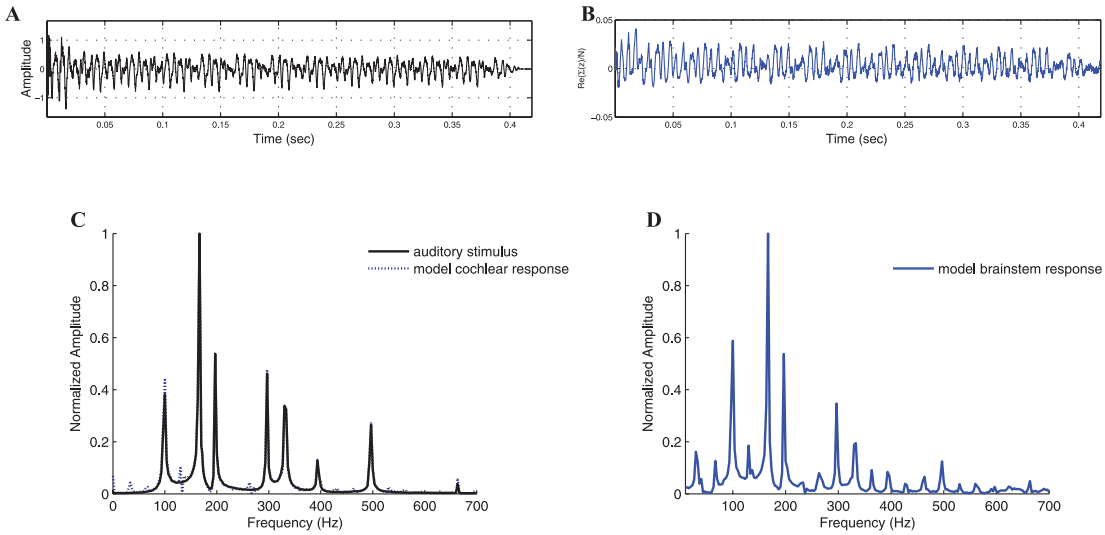

Figure 5. Model ABRs. (A) Time series of a musical interval (Fig. 1A). (B) Time series of the modeled auditory brainstem response. (C) Comparison of the stimulus (panel A) with the FFT of the summed model cochlear output, showing only weak nonlinear distortion products. (D) FFT of the model ABR (from panel B), showing strong nonlinear resonances (compare with Fig. 1A).

frequencies at each level were arranged tonotopically, with characteristic frequencies ranging from 40 Hz to 1,280 Hz, the approximate range for which time-locked responses have been observed in brainstem physiology.[17,18]

Input to the model was the instantaneous pressure waveform of the acoustic stimulus in units of pascals. This stimulus was a (simultaneous) musical interval, G–E, recorded on electric piano[23] (see Fig. 1A). The stimulus was prefiltered using a human middle-ear model.[41,42] The resulting waveform was provided as input into a tonotopic array of outer hair cell oscillators, which provided afferent input to the networks. Figure 5 illustrates the responses. To model the ABR, we sum the time series of all oscillators in the IC network over time, producing a single time series. Figure 5A shows the stimulus time series, and 5B shows the model ABR. As is often observed in ABR experiments,[43] the model IC response appears well correlated with the input stimulus time series. Next, Figure 5C compares the FFT of the input with the output of the cochlear model. As predicted, the model cochlear response includes only weak nonlinear distortion products;[23,24] overall, the cochlear model encodes the stimulus accurately. Finally, Figure 5D shows the FFT of the model ABR (from 5B). The model response to this stimulus contains strong nonlinear resonances, similar to those found in the human ABR (Fig. 1). Careful comparison of the model ABR with the human ABR (Fig. 1A) reveals that those frequencies predicted by the model are all present in the human ABR. In the case of the model, the nonlinear resonances are created by the mode-locking dynamics of the CN and IC networks. The relative amplitude of modeled ABR frequencies differs somewhat from the human ABR. However, this simple version of the model does not consider realistic connectivity and changes that might occur due to learning. The observation that even this simplified model agrees with human ABR provides strong qualitative support for this model of auditory neurodynamics.

Discussion

Traditional models of central auditory processing rely on synaptic delays to enable temporal computations (e.g., autocorrelation), thought to be necessary for auditory processes such as pitch perception.[44,45] However, the stark lack of evidence for neural delays over the time scale required for pitch perception presents a significant puzzle for this theoretical approach.[46] The current approach provides an alternative model of nonlinear signal processing that does not require delays and is consistent with certain facts about nonlinear processing in the central auditory system.[10,18,31,47] Importantly, this

approach makes predictions about neural population responses that qualitatively match human auditory brainstem responses.

Because mode-locking dynamics provide predictions of stability and attraction among neural frequencies that agree well with perceptual measures of tonal stability,[15,48] this approach may point to general neurodynamic principles that underlie tonal cognition. If mode-locking auditory dynamics lead directly to stability and attraction, and the same dynamics accurately predict human auditory physiology, this would strongly suggest that important aspects of tonal cognition are intrinsic to auditory neurodynamics.[49] Thus, the role of learning and enculturation may be to refine tonal relationships rather than to establish them *de novo*. The next step in this research will be to refine models by fitting parameters to data, and to use realistic connection patterns within and between auditory networks. In addition, simulation of Hebbian learning in generic oscillator networks[15,50] will help us to understand the role of learning in modulating auditory responses.[51] Thus, this approach may lead to an understanding of which aspects of tonality are intrinsic to the dynamics of the auditory system and which are learned on the basis of enculturation. Future modeling efforts based on generic dynamical systems could bring us closer to understanding fundamental mechanisms of auditory system development, with implications for understanding the development of music cognition.

Acknowledgments

The authors wish to thank Kyung Myun Lee, Erika Skoe, Nina Kraus, and Richard Ashley for providing their stimuli and data, and for invaluable discussions regarding this work. Thanks also to Muhammad Zilany and Laurel Carney for providing their human middle ear model. We also thank Ji Chul Kim for critical comments on this work and for his comments on a draft of this manuscript. This work was supported by NSF Grant BCS-1027761.

Conflicts of interest

The authors declare no conflicts of interest.

References

1. Larson, S. 2004. Musical forces and melodic expectations: comparing computer models and experimental results. *Music Percept.* **21:** 457–498.
2. Bharucha, J.J. 1984. Anchoring effects in music: the resolution of dissonance. *Cogn. Psychol.* **16:** 485–518.
3. Lerdahl, F. 2001. *Tonal Pitch Space*. Oxford University Press. New York.
4. Zuckerkandl, V. 1956. *Sound and Symbol: Music and the External World*. Princeton University Press. Princeton.
5. Burns, E.M. 1999. Intervals, scales, and tuning. In *The Psychology of Music*. D. Deustch, Ed.: 215–264. Academic Press. San Diego.
6. Helmholtz, H.L.F. 1863. *On the Sensations of Tone as a Physiological Basis for the Theory of Music*. Dover Publications. New York.
7. Ohm, G.S. 1843. Uber die Definition des Tones, nebst daran geknufter Theorie der Sirene und ahnlicher tonbildender Vorichtungen. *Ann. Phys. Chem.* **135:** 513–565.
8. Robles, L., M.A. Ruggero & N.C. Rich. 1997. Two-tone distortion on the basilar membrane of the chinchilla cochlea. *J. Neurophysiol.* **77:** 2385–2399.
9. Ruggero, M.A., N.C. Rich, A. Recio, *et al.* 1997. Basilar-membrane responses to tones at the base of the chinchilla cochlea. *J. Acoust. Soc. Am.* **101:** 2151–2163.
10. Escabi, M.A. & C.E. Schreiner. 2002. Nonlinear spectrotemporal sound analysis by neurons in the auditory midbrain. *J. Neurosci.* **22:** 4114–4131.
11. Large, E.W. & J.D. Crawford. 2002. Auditory temporal computation: interval selectivity based on post-inhibitory rebound. *J. Comput. Neurosci.* **13:** 125–142.
12. Langner, G. 2007. Temporal processing of periodic signals in the auditory system: neuronal representation of pitch, timbre, and harmonicity. *Z. Audiol.* **46:** 8–21.
13. Sutter, M.L. & C. Schreiner. 1991. Physiology and topography of neurons with multipeaked tuning curves in cat primary auditory cortex. *J. Neurophysiol.* **65:** 1207–1226.
14. Shapira Lots, I. & L. Stone. 2008. Perception of musical consonance and dissonance: an outcome of neural synchronization. *J. Royal Soc. Interface* **5:** 1429–1434.
15. Large, E.W. 2010. Dynamics of musical tonality. In *Nonlinear Dynamics in Human Behavior*. Raoul Huys & Viktor JIrsa, Eds.: 193–211. Springer. New York.
16. Large, E.W. & A.E. Tretakis. 2005. Tonality and nonlinear resonance. The neurosciences and music II: from perception to performance. *Ann. N.Y. Acad. Sci.* **1060:** 53–56.
17. Langner, G. 1992. Periodicity coding in the auditory system. *Heart Res.* **60:** 115–142.
18. Joris, P.X., C.E. Schreiner & A. Rees. 2004. Neural processing of amplitude-modulated sounds. *Physiol. Rev.* **84:** 541–577.
19. Chertoff, M.E. & K.E. Hecox. 1990. Auditory nonlinearities measured with auditory-evoked potentials. *J. Acoust. Soc. Am.* **87:** 1248–1254.
20. Galbraith, G.C. 1994. Two-channel brain-stem frequency-following responses to pure tone and missing fundamental stimuli. *Electroencephalogr. Clin. Neurophysiol.* **92:** 321–330.
21. Pandya, P.K. & A. Krishnan. 2004. Human frequency-following response correlates of the distortion product at 2F1-F2. *J. Am. Acad. Audiol.* **15:** 184–197.
22. Purcell, D.W., B. Ross, T.W. Picton & C. Pantev. 2007. Cortical responses to the 2f1-f2 combination tone measured indirectly using magnetoencephalography. *J. Acoust. Soc. Am.* **122:** 992–1003.

23. Lee, K.M., E. Skoe, N. Kraus & R. Ashley. 2009. Selective subcortical enhancement of musical intervals in musicians. *J. Neurosci.* **29:** 5832–5840.
24. Dhar, S. *et al*. 2009. Exploring the relationship between physiological measures of cochlear and brainstem function. *Clin. Neurophysiol.* **120:** 959–966.
25. Knight, R.D. & D.T. Kemp. 2001. Wave and place fixed DPOAE maps of the human ear. *J. Acoust. Soc. Am.* **109:** 1513–1525.
26. Koepsell, K., X. Wang, J.A. Hirsch & F.T. Sommer. 2010. Exploring the function of neural oscillations in early sensory systems. *Front Neurosci* **4:** 53.
27. Large, E.W., J. Kozloski & J.D. Crawford. 1998. A dynamical model of temporal processing in the fish auditory system. *Assoc. Res. Otolaryngol. Abst.* **21:** 717.
28. Guttman, R., L. Feldman & E. Jakobsson. 1980. Frequency entrainment of squid axon membrane. *J. Membr. Biol.* **56:** 9–18.
29. Brumberg, J.C. & B.S. Gutkin. 2007. Cortical pyramidal cells as non-linear oscillators: experiment and spike-generation theory. *Brain Res.* **1171:** 122–137.
30. Schreiber, S., I. Samengo & A.V.M. Herz. 2009. Two distinct mechanisms shape the reliability of neural responses. *J. Neurophysiol.* **101:** 2239–2251.
31. Sumner, C.J., J. Laudanski, S. Coombes & A.R. Palmer. 2010. Mode-locked spike trains in responses of ventral cochlear nucleus chopper and onset neurons to periodic stimuli. *J. Neurophysiol.* **103:** 1226–1237.
32. Aihara, K., G. Matsumoto & Y. Ikegaya. 1984. Periodic and non-periodic responses of a periodically forced Hodgkin–Huxley oscillator. *J. Theor. Biol.* **109:** 249–269.
33. Lee, S.G. & S. Kim. 2006. Bifurcation analysis of mode-locking structure in a Hodgkin-Huxley neuron under sinusoidal current. *Phys. Rev. E. Stat. Nonlin. Soft Matter Phys.* **73:** 041924.
34. Hoppensteadt, F.C. & E.M. Izhikevich. 1996. Synaptic organizations and dynamical properties of weakly connected neural oscillators I: analysis of a canonical model. *Biol. Cybern.* **75:** 117–127.
35. Large, E.W., F. Almonte & M. Velasco. 2010. A canonical model for gradient frequency neural networks. *Physica D: Nonlinear Phenomena* **239:** 905–911.
36. Cartwright, J.H.E., D.L. Gonzalez & O. Piro. 1999. Universality in three-frequency resonances. *Phys. Rev. L.* **59:** 2902–2906.
37. Pikovsky, A., M. Rosenblum & J. Kurths. 2001. *Synchronization: A Universal Concept in Nonlinear Sciences*. Cambridge University Press. Cambridge.
38. Choe, Y., M.O. Magnasco & A.J. Hudspeth. 1998. A model for amplification of hair-bundle motion by cyclical binding of Ca2+ to mechanoelectrical-transduction channels. *Proc. Nat. Acad. Sci.* **95:** 15321–15336.
39. Eguìluz, V.M., M. Ospeck, Y. Choe, *et al*. 2000. Essential nonlinearities in hearing. *Phys. Rev. L.* **84:** 5232.
40. Kern, A. & R. Stoop. 2003. Essential role of couplings between hearing nonlinearities. *Phys. Rev. L.* **91:** 128101–128104.
41. Zilany, M.S. & I.C. Bruce. 2006. Modeling auditory-nerve responses for high sound pressure levels in the normal and impaired auditory periphery. *J. Acoust. Soc. Am.* **120:** 1446.
42. Zilany, M.S., I.C. Bruce, P.C. Nelson & L.H. Carney. 2009. A phenomenological model of the synapse between the inner hair cell and auditory nerve: long-term adaptation with power-law dynamics. *J. Acoust. Soc. Am.* **126:** 2390.
43. Skoe, E. & N. Kraus. 2010. Auditory brain stem response to complex sounds: a tutorial. *Ear Heart* **31:** 302–324.
44. Licklider, J.C.R. 1951. A duplex theory of pitch perception. *Experientia* **7:** 128–134.
45. Cariani, P.A. & B. Delgutte. 1996. Neural correlates of the pitch of complex tones: I. Pitch and pitch salience. *J. Neurophysiol.* **76:** 1698–1716.
46. de Cheveigne, A. & D. Pressnitzer. 2006. The case of the missing delay lines: synthetic delays obtained by cross-channel phase interaction. *The J. Acoust. Soc. Am.* **119:** 3908–3918.
47. Robles, L. & M.A. Ruggero. 2001. Mechanics of the mammalian cochlea. *Physiol. Rev.* **81:** 1305–1352.
48. Krumhansl, C.L. & E.J. Kessler. 1982. Tracing the dynamic changes in perceived tonal organization in a spatial representation of musical keys. *Psychol. Rev.* **89:** 334–368.
49. Large, E.W. 2010. Neurodynamics of music. In *Springer Handbook of Auditory Research: Music Perception*, Vol. 36. M.R. Jones, R.R. Fay & A.N. Popper, Eds.: 201–231. Springer. New York.
50. Hoppensteadt, F.C. & E.M. Izhikevich. 1996. Synaptic organizations and dynamical properties of weakly connected neural oscillators II: learning phase information. *Biol. Cybern.* **75:** 126–135.
51. Anderson, S., E. Skoe, B. Chandrasekaran, *et al*. 2010. Brainstem correlates of speech-in-noise perception in children. *Heart Res.* **270:** 151–157.